MX	MEXICO

Diagram / Parts List

CL001G

CORDLESS CLEANER

2022/05

(MX) CL001G / CORDLESS CLEANER

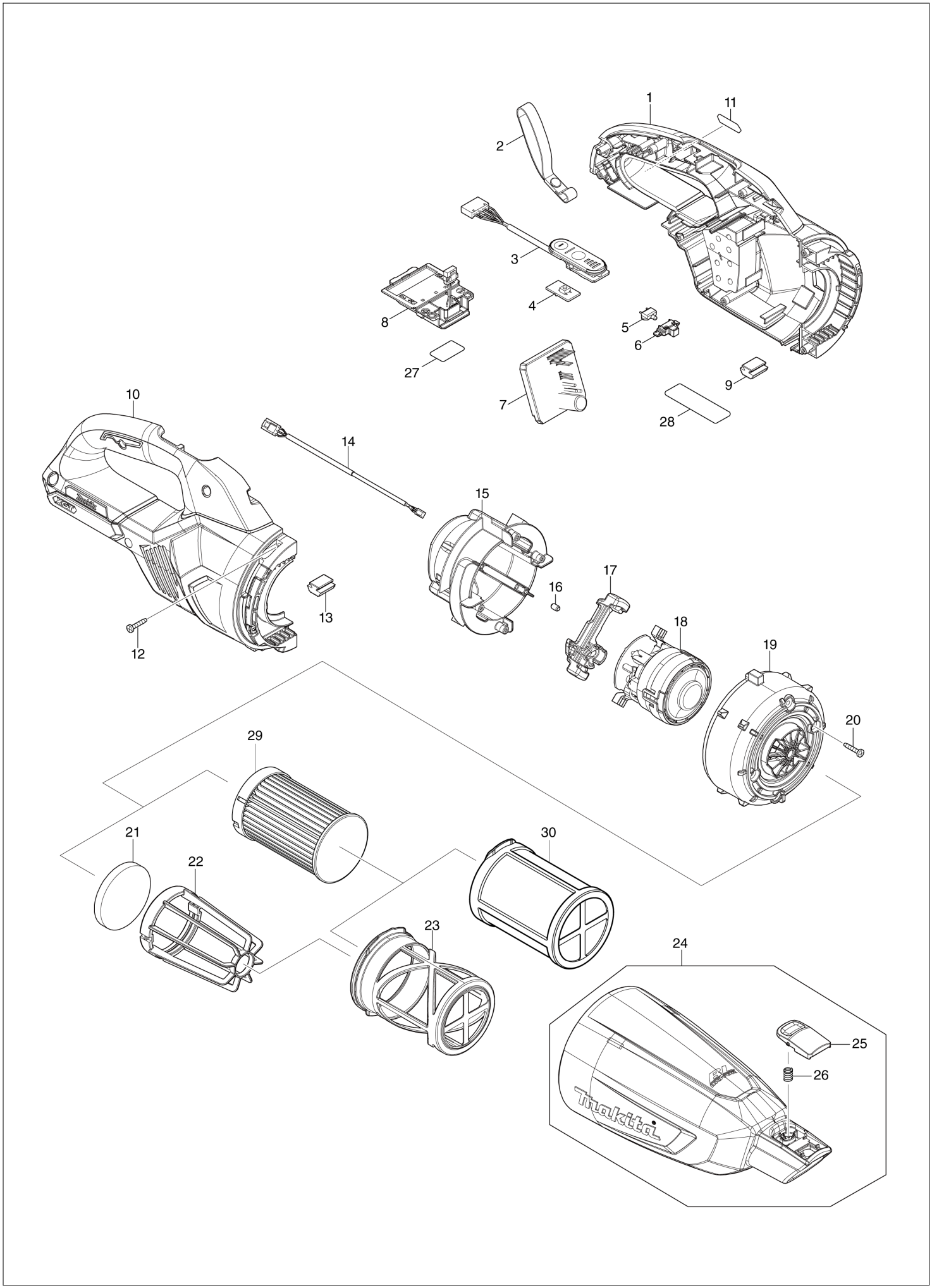

MX	MEXICO

CL001G / CORDLESS CLEANER

Item	Sub	Parts No.	Parts Description	Qty	I/C	E/C No.	Close No.	Remark
001		183T18-7	HOUSING SET	1				
	C10	263005-3	RUBBER PIN 6	2				
	C20	422714-5	SPONGE SEAT	2				
	D10		INC. 9,10,13					
003		141B54-1	INDICATION CIRCUIT COMPLETE	1				
	C10	8031J2-9	SWITCH LABEL	1				
004		620E74-1	SWITCH UNIT	1				
005		620E82-2	LED CIRCUIT	1				
006		459478-8	LENS CASE	1			DD995	
006-1		141H09-2	LED CASE COMPLETE	1	O	DD995		
007		620E72-5	CONTROLLER	1				
008		632P65-6	TERMINAL UNIT	1				
009		422460-0	RUBBER PLATE	1				
010		183T18-7	HOUSING SET	1				
	C10	263005-3	RUBBER PIN 6	2				
	C20	422714-5	SPONGE SEAT	2				
	D10		INC. 1,9,13					
011		8005T5-8	XGT LOGO LABEL	1				
012		266429-2	TAPPING SCREW 3X16	7				
013		422460-0	RUBBER PLATE	1				
014		632S32-9	LEAD UNIT	1				
015		141E55-7	MOTOR COVER R COMPLETE	1				
	D10		INC. 16					
016		263002-9	RUBBER PIN 4	4				
017		422723-4	MOTOR COVER SEAL	1				
018		629A46-9	MOTOR ASSEMBLY	1				
019		413645-9	MOTOR COVER F	1				
020		266429-2	TAPPING SCREW 3X16	4				
021		422268-2	SPONGE SHEET 57	1				
022		458467-0	STAY	1				
023		199966-0	EASY SHAKE OFF FILTER B SET	1				
024		136400-9	CAPSULE ASS'Y	1			DD995	
	C10	266326-2	TAPPING SCREW 4X18	1			DD995	
	C20	941051-3	FLAT WASHER 4	1			DD995	
	C30	424208-6	VALVE	1			DD995	
	D10		INC. 25,26				DD995	
024-1		136653-0	CAPSULE ASS'Y	1	O	DD995		
	C10	266326-2	TAPPING SCREW 4X18	1		DD995		
	C20	941051-3	FLAT WASHER 4	1		DD995		
	C30	424208-6	VALVE	1		DD995		
	D10		INC. 25,26			DD995		
025		458939-5	BUTTON A	1			DD995	
025-1		413F33-6	BUTTON C	1	O	DD995		
026		232485-4	COMPRESSION SPRING 5	1				
027		811M37-8	CL001G SERIAL NO. LABEL	1				
028		811M30-2	CL001G NAME PLATE	1				
A01		127825-8	NOZZLE ASSEMBLY	1				
A02		413770-6	SASH NOZZLE	1				
A03		459354-6	NOZZLE HOLDER	1				
A04		459353-8	PIPE	1				
A10B		***DC40RA	DC40RA FAST CHARGER	1				
	D10		COMPO-PARTS					
A11B		191B36-3	BATTERY BL4025 SET	1				
A12B		412393-7	BATTERY COVER	1				

B:CL001GD119(L)

Interchange
O : Yes
X : No
< : the new part can be substituted for the current.
> : the current part can be substituted for the new.
S : Interchangeable as a set.